PERRIN & ROWE®
LONDON

HOUSE OF ROHL

SPECIFICATIONS

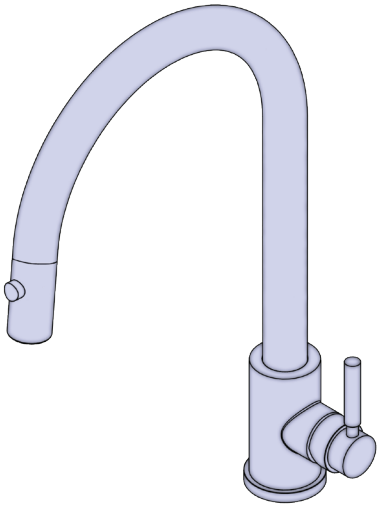

DESCRIPTION

- Flexible connectors for easier installation
- Supplied with 15mm double check valves
- Retractable pull down metal handspray
- Dual spray with automatic lock
- Easy clean spray nozzles
- Automatic reset diverter function

FLOW

- Recommended working pressure 0.5 bar/7.5PSI
- Maximum 5 bar/ 75 PSI
- 3L /min at 0.5 bar
- 6L /min at 3 bar

WARRANTY

- www.perrinandrowe.co.uk

Monobloc Sink Mixer with Pull-down Rinse

MODELS: 4044

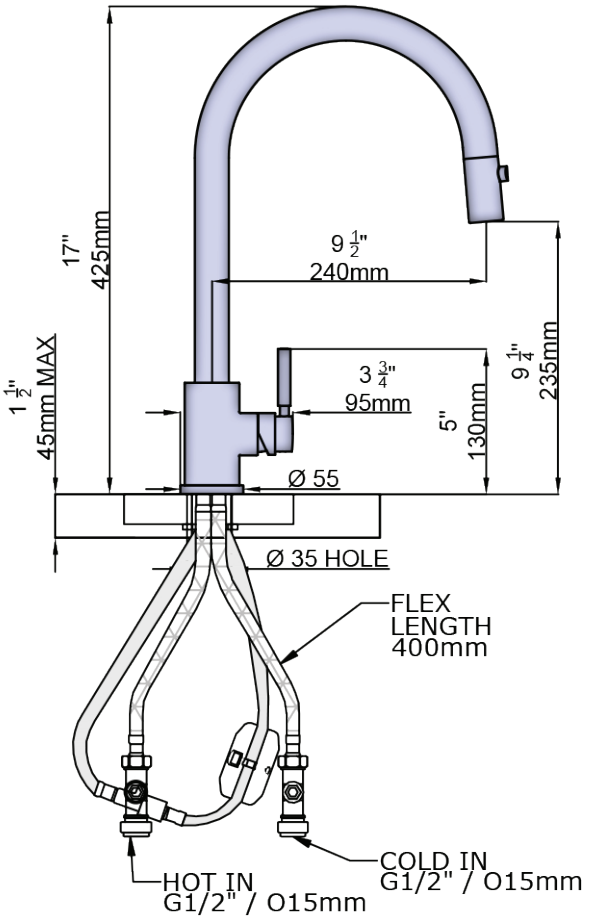

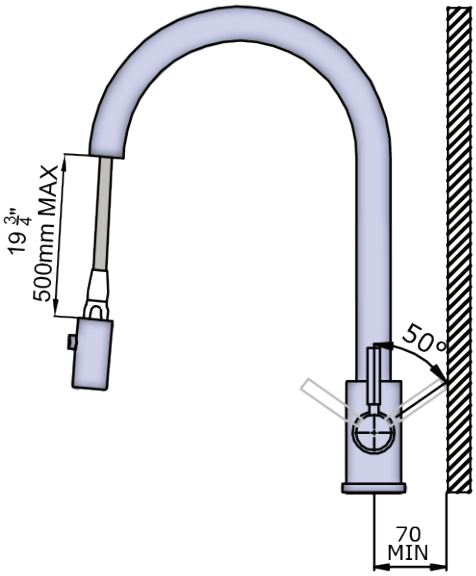

+44 (0) 1708 526 361

www.perrinandrowe.co.uk

A DISTINCTIVE MEMBER OF THE HOUSE OF ROHL

Rev. 09/23