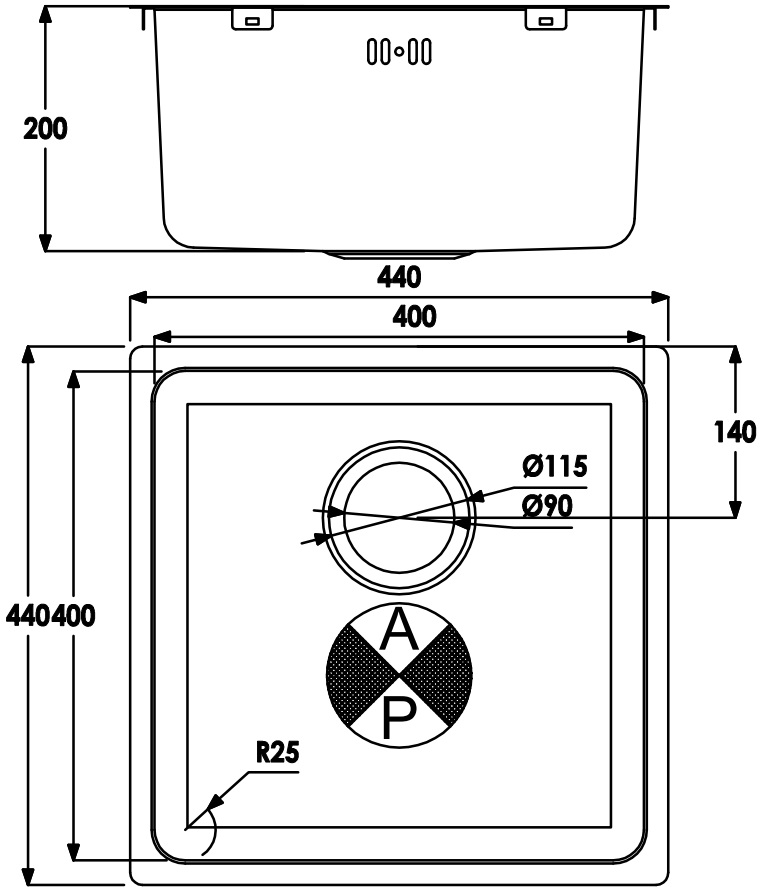
200
440
400
140
Ø115
Ø90
440400
A
P
R25

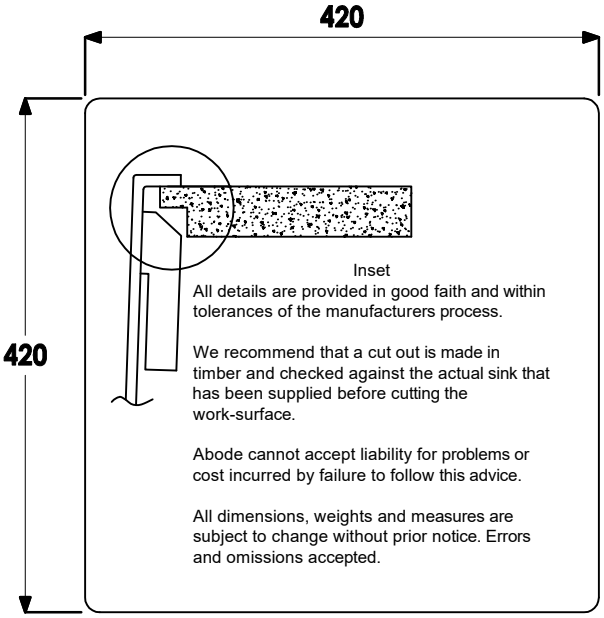
420
420
Inset
All details are provided in good faith and within tolerances of the manufacturers process.
We recommend that a cut out is made in timber and checked against the actual sink that has been supplied before cutting the work-surface.
Abode cannot accept liability for problems or cost incurred by failure to follow this advice.
All dimensions, weights and measures are subject to change without prior notice. Errors and omissions accepted.

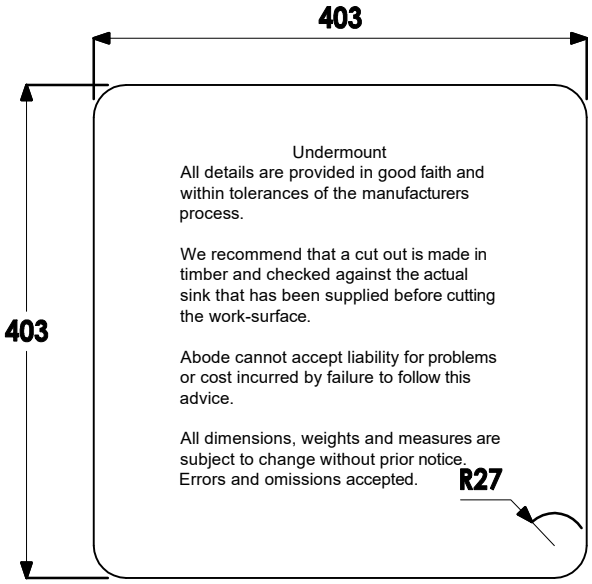
403
403
Undermount
All details are provided in good faith and within tolerances of the manufacturers process.
We recommend that a cut out is made in timber and checked against the actual sink that has been supplied before cutting the work-surface.
Abode cannot accept liability for problems or cost incurred by failure to follow this advice.
All dimensions, weights and measures are subject to change without prior notice. Errors and omissions accepted.
R27